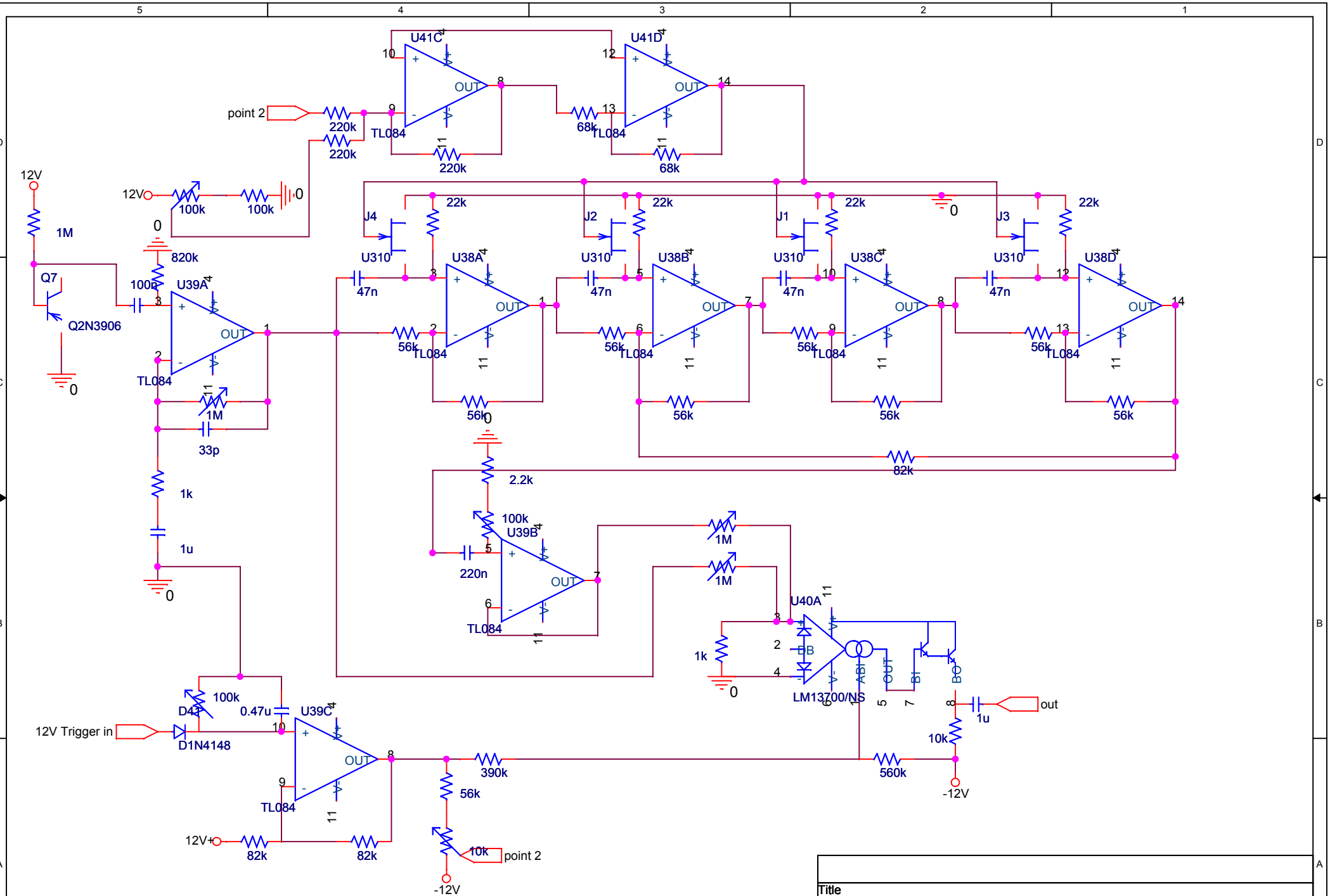

Title	crash module	
Size A	Document Number 1	Rev 0.5.4
Date: Tuesday, November 04, 2008	Sheet 1 of 1	