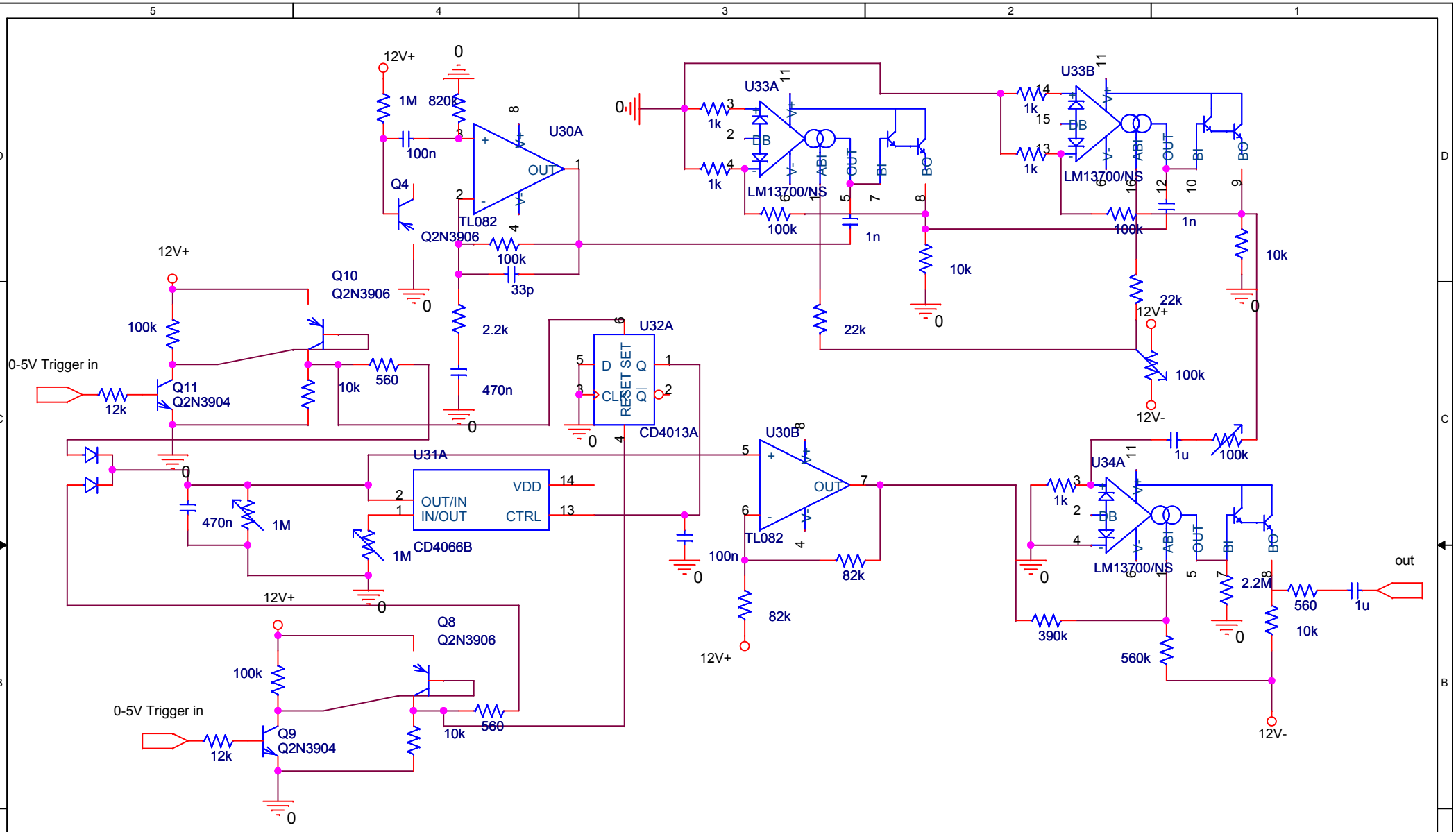

Title	<Title>	
Size A	Document Number <Doc>	Rev <RevCo
Date: Tuesday, November 04, 2008	Sheet 1 of 1	